Data sheet
mtv/db1/*, mtv/db2/*

Driver box

Figure 1 – mtv/db1/tch driver box

- Integrates up to two valve drivers *mtv/ehm/a*
- LC display and rotary encoder interface
- SD card for settings and firmware updates
- Status LEDs for both channels
- Two Ethernet ports for uplink and system expansion
- USB 2.0 (full speed) service interface
- Panel mountable in 4U 19” rack

*mtv/db** is used to configure, update and monitor dispensing systems. Values such as pulse and cycle time, cycle count and temperature can be monitored and laboratory tests (triggering, purging, heating etc.) can be run facilitating the setting up of a system.

The driver box can house up to two *mtv/ehm/a* valve driver modules to which a marco *mtv/d** dispensing valve drive can be connected. See doc:P/mtv/ehm/doc/001 for more information on *mtv/ehm/a*.

Technical data	
Weight	mtv/db1: 1.23 kg, mtv/db2: 1.49 kg
Operating voltage	nominal 24 V
Accessories	
Power supply	mtv/ps/280v
Power supply connector	Phoenix Contact 1757035 (MSTB 2,5/ 4-ST-5,08)
Valve cable	mtv/cab/450c
Hot melt system cable	mtv/cab/450epa
Please see doc:P/mtv/doc/014 and/026 for other cables.	

Driver box	Interface			
	IO1	**IO2**	**IO3**	**IO4**
mtv/db*/tca	Output: Temp OK	Input: ConfActivate	n.c.	n.c.
mtv/db*/tch	Output: Temp OK	Input: ConfActivate	n.c.	n.c.
mtv/db*/tpa	Input: Bit 0 TriggerSelect	Input: Bit 1 TriggerSelect	Input: Bit 2 TriggerSelect	n.c.
mtv/db*/tph	Input: Bit 0 TriggerSelect	Input: Bit 1 TriggerSelect	Input: Bit 2 TriggerSelect	n.c.
mtv/db*/tcb	Output: Temp OK	Input: P400 off	Input: Flush	Input: Heater start
mtv/db*/tcc	Output: Temp OK	Input: ConfActivate	Output: Dispense Active	n.c.

Copyright©2018

marco Systemanalyse und Entwicklung GmbH
Hans-Böckler-Str 2, 85221 Dachau, Germany
Tel +49 8131 5161-0 Fax +49 8131 5161-66

Distributed by: IGB-tech GmbH - T: +49 (0) 6322 949 5787 - www.igb-tech.de

Driver box	Interface		
	RDY	**RDY2**	**INP2**
mtv/db*/tca	Output: Ready/no failure	n.c.	n.c.
mtv/db*/tch	Output: Ready/no failure	Output: temp ok for hotmelt	Input: Heater start hotmelt
mtv/db*/tpa	Output: Ready/no failure	n.c.	n.c.
mtv/db*/tph	Output: Ready/no failure	Output: temp ok for hotmelt	Input: Heater start hotmelt
mtv/db*/tcb	Output: Ready/no failure	Input: ConfAvctivate	Input: Set temp 0-10V = 0-200°C
mtv/db*/tcc	Output: Ready/no failure	n.c.	n.c.

Legend: n.c. = not connected

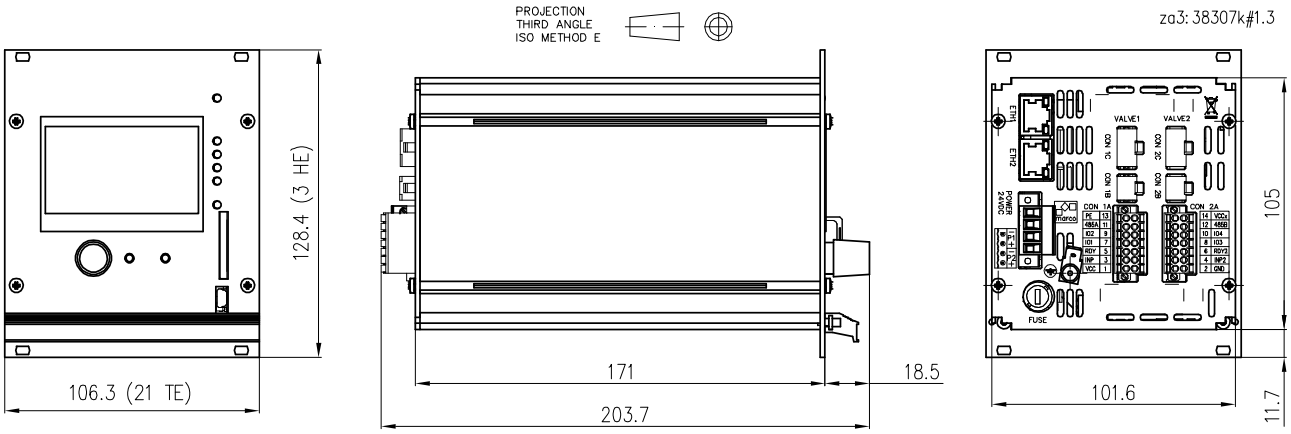

Figure 2 – Dimensions mtv/db*

Order number	Description
mtv/db1/tca-1	Driver box (single channel)
mtv/db1/tcc-1	Driver box (single channel)
mtv/db2/tcc-1	Driver box (dual channel)
mtv/db1/tch-1	Driver box hot melt (single channel)
mtv/db1/tpa-1	Driver box (multi-sequence)
mtv/db1/tph-1	Driver box hot melt (multi-sequence)
mtv/db2/tca-1	Driver box (dual channel)
mtv/db2/tch-1	Driver box hot melt (dual channel)

Distributed by: IGB-tech GmbH - T: +49 (0) 6322 949 5787 - www.igb-tech.de